IJARSCT
International Journal of Advanced Research in Science, Communication and Technology
International Open-Access, Double-Blind, Peer-Reviewed, Refereed, Multidisciplinary Online Journal
ISSN: 2581-9429
Volume 6, Issue 4, November 2026
Impact Factor: 8.2

Solar Powered Hybrid Dryer for Agriculture Product Preservation and Value Addition

Sandeep K[1], Mohammed Afreed H N[2], Mohammed Afreed[3], Pranav B M[4], Yasir-al-Sahaf[5]
Assistant Professor, Dept of Mechanical Engineering[1]
Students, Dept of Mechanical Engineering[2-5]
Kalpataru Institute of Technology Tiptur, Karnataka.

Abstract: *World is mostly concentrating on new inventions and running with updated technology. Farmers are back bone for every country in the world. Without farmers livelihood is difficult. Solar Powered Hybrid Dryer for Agriculture Product Preservation and Value AdditionThe preservation of agricultural produce through effective drying is essential for reducing post-harvest losses and maintaining grain quality for long-term storage. This project focuses on the design, fabrication, and performance evaluation of an electrically powered, forced-convection multigrain air dryer. The system was developed as a controlled alternative to traditional open-air sun drying, which is often inconsistent and prone to contamination. Methodology & Fabrication The dryer was constructed using a thermally insulated drying chamber to minimize heat loss. The core heating system consists of electric heating coils that raise the temperature of the incoming air to the required levels. A centrifugal blower was integrated to facilitate forced air circulation, ensuring that the heated air is evenly distributed throughout the chamber. To support the grains and allow for maximum air-to-grain contact, the system utilizes multiple perforated plates (trays). These plates were designed with specific hole diameters to provide optimal airflow while preventing grain fall through. Performance Evaluation The performance of the fabricated model was evaluated using different types of grains (such as maize, wheat, and paddy). Key parameters measured included the drying rate, thermal efficiency, and moisture removal rate. Results indicated that the forced-air circulation system significantly reduced drying time compared to natural convection methods.*

Keywords: solar-powered hybrid dryer, Multigrain Electrical Air Dryer, Air circulation system, Tray and grain holding system, Food processing industries, Rice mills and flour mills.

I. INTRODUCTION

Post-harvest grain drying is a critical operation in the agricultural processing chain, as freshly harvested grains often contain high moisture content, which makes them susceptible to fungal growth, insect infestation, and quality degradation during storage. To ensure long-term preservation and maintain the nutritional and physical quality of grains, the moisture content must be reduced to safe levels before storage or further processing. Traditionally, open sun drying has been the most common method used by farmers due to its simplicity and low cost. However, it suffers from numerous drawbacks such as dependence on weather conditions, uneven drying, contamination from dust and pests, and substantial post-harvest losses.

To overcome these limitations, mechanical drying technologies have been developed to provide faster, cleaner, and more controlled drying environments. Among these, the Multi- Grain Air Dryer offers a versatile and efficient

Solution capable of drying different types of grains including wheat, rice, maize, pulses, millet, and barley—using a controlled flow of heated air. Unlike conventional dryers designed for a single crop, this system is adaptable to multiple grain types, making it ideal for diversified farming systems and small-scale industries.

Copyright to IJARSCT
www.ijarsct.co.in
DOI: 10.48175/IJARSCT-40976

IJARSCT
International Journal of Advanced Research in Science, Communication and Technology
International Open-Access, Double-Blind, Peer-Reviewed, Refereed, Multidisciplinary Online Journal
ISSN: 2581-9429
Volume 6, Issue 4, November 2026
Impact Factor: 8.2

II. LITERATURE SURVEY

Authors: L.AkanaNguimdo, V.A.KembouNoumegnie
Year: 2020
Title: Automatic Indirect Hybrid Electrical Dryer
This study focused on the design and development of an automatic indirect hybrid solar drying system. The system includes a drying chamber, axial fans, and a microprocessor-based control unit. A photovoltaic system supplies power to the fans and control system, allowing operation during both day and night. A backup heating source is also provided to maintain temperature when radiation is low. Experimental results showed that even at low solar intensity, the temperature inside the drying chamber increased significantly. The inclusion of a backup heater improved drying rate and moisture removal efficiency.
Conclusion: The hybrid system ensures continuous drying, improves efficiency, and is highly suitable for multi-grain drying using cost-effective materials.

III. PROJECT OBJECTIVES

1. To design and develop a compact and cost-effective multigrain electrical air dryer suitable for drying different varieties of agricultural grains.
2. To fabricate a drying chamber with perforated trays that allows uniform distribution of heated air and effective moisture removal from the grains.
3. To develop an efficient air circulation system using a blower or fan to ensure uniform airflow throughout the drying chamber.
4. To integrate an electrical heating element with a temperature regulator to maintain the required drying temperature for different types of grains.
5. To incorporate a temperature monitoring system using a digital temperature display for continuous monitoring of the drying chamber temperature.
6. To evaluate the drying performance of the fabricated system by measuring moisture reduction and drying time for selected grains such as wheat, peanuts, maize corn, and green peas.
7. To minimize the limitations of traditional open-sun drying methods, such as weather dependency, contamination, uneven drying, and excessive manual labour.

IV. SCOPE OF THE PROJECT

Automatic Temperature Control system can be upgraded with an advanced temperature controller to automatically maintain the required drying temperature according to the type of grain. Humidity sensors can be incorporated to monitor the moisture level inside the drying chamber and help determine the completion of the drying process. Solar panels can be incorporated as an additional energy source to reduce electrical power consumption and make the dryer more energy-efficient. The air duct and blower arrangement can be further modified to achieve uniform hot-air circulation across all trays and improve the overall drying performance. Better insulation materials and an improved heating arrangement can be used to minimize heat loss and reduce operating costs. The size of the drying chamber and the number of trays can be increased to handle larger quantities of grains, depending on the required application

V. METHODOLOGY AND DESIGN

A multi-grain air dryer is a system designed to remove moisture from different types of grains using controlled airflow and temperature. It improves storage life, prevents fungal growth, and maintains grain quality. Such systems are widely used in agriculture for post-harvest processing. To solve these issues, there is a need for a compact, efficient, and controlled drying system capable of handling multiple grain types. Therefore, the fabrication of a Multigrain Electrical Air Dryer is proposed to provide reliable, hygienic, and energy-efficient grain drying.

IJARSCT
International Journal of Advanced Research in Science, Communication and Technology
International Open-Access, Double-Blind, Peer-Reviewed, Refereed, Multidisciplinary Online Journal
ISSN: 2581-9429
Volume 6, Issue 4, November 2026
Impact Factor: 8.2

A solar-powered hybrid dryer combines direct or indirect solar thermal collection with an auxiliary power or heating source (such as electric heating elements, or phase-change thermal storage) to ensure continuous, hygienic dehydration of agricultural products.

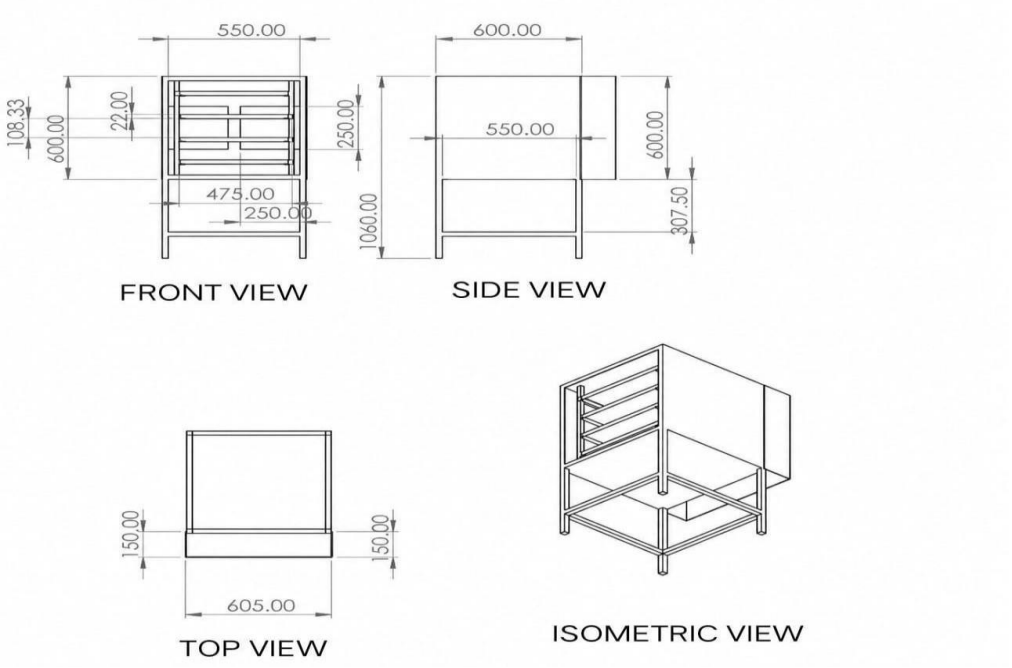

VI. RESULTS AND DISCUSSIONS

Grain mean dimensions of the randomly selected twenty varieties of grains in terms of length (L), width (W) and thickness

(T) shown in Table 1 below was used to calculate the properties of grains such as; volume (V), geometric diameter (Dg), arithmetic diameter (Da), percent of sphericity (S), areaofsurface (Af), area of transverse surface (At), density and porosity of the individual seeds.

Sample	Length	Width	Thickness
Wheat	6.22	3.23	2.28
Peanut	21.68	11.56	13.54
Maize corn	9.78	7.39	3.52
Green peas	8.20	6.50	4.12

Samples	Wheat	Peanut	Maize corn	Green peas
Length(L) mm	6.220	21.680	9.780	8.20
Width(W) mm	3.230	11.560	7.390	6.50
Thickness(T) mm	2.280	13.540	3.520	4.120
Volume(V) mm	23.994	1776.783	133.206	114.980

IJARSCT
International Journal of Advanced Research in Science, Communication and Technology
International Open-Access, Double-Blind, Peer-Reviewed, Refereed, Multidisciplinary Online Journal
ISSN: 2581-9429
Volume 6, Issue 4, November 2026
Impact Factor: 8.2

Final design summary

Drying duration is influenced by the grain type, variety; initial and final moisture contents the presence of impurities. This duration must be optimized for energy efficiency and grain quality. Air is introduced into the drying chamber with blower, passed through a heating element, and directed using deflectors. A thermostatically controlled heater ensures uniform and safe temperature levels within the chamber. Post-drying, grains are cooled using ambient air to prevent reabsorption of moisture, which can occur if grains are stored while still hot. A slight over-drying phase followed by cooling helps stabilize the final moisture content. Controlling grain moisture content is vital. A temperature display was integrated ensuring optimal drying without grain damage due to over-drying. The knowledge of physical property of the selected grains is very essential for designing appropriate harvesting, drying, and storage systems. These properties, obtained under laboratory conditions, include dimensions (length, width, and thickness), volume, geometric and arithmetic diameters, sphericity, surface area, density, and porosity.

VII. CONCLUSION

A multi grain air dryer is an system used to remove the moisture content from grains. This study has successfully demonstrated the fabrication, and performance evaluation of an electrically powered cabinet grain dryer tailored for small- to medium-scale post-harvest applications. Emphasizing affordability, ease of fabrication, and energy efficiency, the dryer incorporates locally available materials and a user-friendly control system to address key limitations associated with traditional open sun drying.

The system achieved a drying efficiency and effective moisture reduction across various staple grains, confirming its operational reliability and versatility. Ensuring consistent drying conditions and safeguarding grain quality. The selection of thermally efficient and corrosion-resistant materials, combined with a well-insulated drying chamber, contributed to the dryer's enhanced performance and long-term durability. Overall, the dryer presents a promising, energy-efficient solution for improving post-harvest grain management, reducing spoilage, and enhancing food security and market ability in resource-constrained agricultural settings. Future enhancements may focus on further optimizing energy use and scaling up the design for industrial applications.

REFERENCES

1. Adeyanju, C. A., Adewale, B. D., and Bamgbose, A. M. (2020). Evaluation of post-harvest losses in cereal grain production in Nigeria. Journal of Agricultural Research and Development, 20(1), 45–53.
2. Rashid, K., Ayub, A., and Nawaz, M. (2022).Eco-friendly insulation materials for energy efficient food drying systems: A review. Renewable and Sustainable Energy Reviews, 156, 111960.
3. Osagie, A. U., and Eka, O. U. (2023). Nutritional quality of plant foods. Postharvest Research Unit, University of Benin Press.
4. Olagunju, K. O., Ajayi, O. S., and Olaniyan, O. J. (2021). Enhancing grain storage techniques among smallholder farmers in Nigeria. African Journal of Agricultural Extension, 29(1), 94–103.
5. Fohr, J., & Figueiredo, F. J. (2022). Solar drying systems for tropical agriculture. Renewable Energy Review Journal, 3(2), 112–120.