IJARSCT
International Journal of Advanced Research in Science, Communication and Technology
International Open-Access, Double-Blind, Peer-Reviewed, Refereed, Multidisciplinary Online Journal
ISSN: 2581-9429
Volume 6, Issue 2, May 2026
Impact Factor: 8.2

IoT Based Smart Energy Management & Overload Detection System for Hostel Infrastructure

Prof. Priti Sudhakar Gund Pujari[1], Mr. Soham Rasane[2], Miss. Ishwari Popalghat[3], Miss. Sanskruti Rasane[4], Miss. Purva Deshmukh[5]

Professor, Dept. of E&TC Engineering, Adsul's Technical Campus, Ahilyanagar, India[1]
Students, Dept. of Information Technology Engineering, Adsul's Technical Campus, Ahilyanagar, India[2,3]
Students, Dept. of Computer Science Engineering, Adsul's Technical Campus, Ahilyanagar, India[4]
Students, Dept. of E&TC Engineering, Adsul's Technical Campus, Ahilyanagar, India[5]

Abstract: *In this project we introduce energy management and automatic controlling system for hostel rooms. We see in hostel user needs to utilizes common load. But many times, some people may use extra power for their unnecessary uses like ironing, water heater, home theatres, induction etc. so common load & respective light bill may increase due to few of people and that bill have to pay by all. So, to overcome this scenario we introduce a smart energy meter which place on each room to monitor load consumption. And units of all rooms will be monitor on IOT web server. When any one uses overload equipment's then 2 warning SMS send on respective room owner mobile number. & after 3rd warning supply automatically breaks.*

Smart Power Monitoring and Analysis is aimed at developing a solution to keep track of every electrical appliance and monitor the energy used consumed by an Android device. As mentioned, this study's main problem statement is that most of the power meters installed in any hostel showed the total consumption of the electricity used. So, with the upcoming of machine-to-machine communication where devices can be connected wirelessly leading to IoT, we here have developed an IoT based Smart Energy Management system.

Keywords: Energy Management, Current Sensors, IOT webpage, GSM-Module, Hostel Room Energy Management

I. INTRODUCTION

In this era Indian educational institutions had greater development and brought education to the doorstep of publics. In India there had been a lot of educational institutions established over a decade. Maximum numbers of educational institutions are with the old conventional practices for supervising their resources specifically hostel facilities. These old methods with its inherent limitations have negative impact on the general organizational competence of these educational organizations. Subsequently, it has improved knowledge and helps out to produce people of educated citizens who can effortlessly stand by the guidelines of civilized society and contribute meaningfully to the development of democratic governance. Almost all the educational institutions follow the conventional mode of managing the facilities provided by them. This conventional mode of administration leads to the wastage of resources of the management. In hostels, some irresponsible students failed to switch off the fans and lights when they leave the rooms. In accordance with the survey in 2015 over 2 billion units of electricity is wasted by educational institutions in a single year. The Energy Management and Energy Proficiency are a fragment of government policy to decouple financial progress from development in energy consumption and decrease the energy intensity of the budget says

Annual Ministry of Power (MoP) report 2015-16. Increase in energy requirement is another pressure for government and energy maintenance is the only solution for this problem.

Nowadays, the hostel is using conventional switch to turn on the power. Since India is a high temperature country, most of students will rather turn on the air conditioner by whole day. Of course, students will not stay whole day in their hostel because the students need to attend the class or need to eat their meals. Although there are no people in the hostel, some students will still turn on the air conditioner in their room in order to have a desired temperature. This will cause a lot of power wastage. Thus, this project is to implement Student ID card as a key to switch on the power of the hostel. As introduction written, the key card switch can save the power consumption by 20% to 30% (Hotel Energy Solutions, 2020). Other than that, the power consumption can be sent to students' email and students' phone by monthly. Without this system, the manpower is needed to go to each hostel to record the power consumption. This will waste a lot of time. Thus, this system is implemented in the hostel contains a lot of advantages.

Aims and objectives

• Nowadays the energy consumption of all our appliances is huge in level. Therefore, energy consumption can be done by energy management system to reduce the energy consumption

• To keep watch on all hostel rooms power utilization.

• Automatically breakdown system after 2 warnings when overload detected

• Aim of our project creates an opportunity for consumers to control their power consumption practices and help them manage their power and energy usage.

• It also creates an opportunity for the consumers to practice energy saving and to keep track of their household appliance's performances and current behaviour to prevent overcurrent.

• Therefore, the main challenge will be designing an efficient technique that can monitor power consumption in hostels

II. LITERATURE SURVEY

There are numerous research papers [1] –[14] based on IoTfor providing solution for many of the existing problems. Tarun Kumar Singhal et al. [1] proposed IoT based smart hostel. This provides conceptual frameworks for several problems. Abhaykumar and NehaTiwari[2] have planned energy competent smart automation structure for home. This works under three different modes. GunjalM.Set al. [3] proposed hostel administration through online mode. This system is designed by means of four different modules namely, student module, mess module, staff module and the SMS module. This system is efficient in terms of time saving for the students.RajanDatt et al. [4] designed attendance management system by means of using fingerprint scanner. Student data base is prepared initially and this data base is compared each time when the student accesses the system. Hnin Nu Thaung et.al,[5] have intended a arrangement which can supervise the usage of energy in the real-time and likewise the operator can remotely regulate the electricity usage. This paper, IoT based well-organized hostel administration system aims to address and provide a common solution to these two issues in an efficient manner

Rahman et al., 2015) introduce a smart meter system by using Arduino and GSM for advanced metering and billing system. The traditional metering and billing system is slow compared to the system proposed by researchers. Basically, Arduino acts as a microcontroller which is the brain of this system. The function of Arduino is used to perform the appropriate outcome based on the code in the Arduino. The GSM can allow the Arduino to connect with the internet. Other than that, messages sending or receiving can be done by using GSM as well. The software used in this system is Proteus 8.0. Other than Arduino and GSM, there are a lot of components used such as energy meter which is digital, relay and buzzer. The energy meter is used to measure voltage and current to calculate the energy. In this system, when the Arduino and GSM Modem is turned on, the relay will be turned on to make the connection with the load and energy meter. The current data will be displayed by reading the EEPROM. At the same time, the Arduino will read the signal from the energy meter. Once receiving the signal, the Arduino will increase and display the current data. In this case, the GSM Modem is used to check the SMS. The data will be sent to the specific number if the SMS is "DATA". The

relay will be turned on and turned off if the SMS is "LINE OK" and "LINE CUT" respectively. Other than these three formats, the SMS will be deleted. The Arduino can detect whether tampering attempt occur or not. If it is detected, the Arduino will turn off the relay to cut off the connection with the load. After that, the buzzer will be turned on and the service provider will receive the SMS to alert them. In this 21st century, there have a person who stand in front of our house's electrical meter once a month to record the electrical bills. The disadvantages of using manpower to record are human error which is extra changes for bills.

To solve this problem (Sahani et al., 2017), propose an IoT based smart energy meter. In this system, there are some components used which are energy meter, signal conditioner, Arduino Uno, Max 232, GSM, Wi-Fi module, webpage, driver circuit and switching device(Sahani et al., 2017).

switch device used in this system is Solid State Relay (SSR). It is used to turn on or off the meter. The signal conditioner is used to increase the voltage of the LED in the meter to allow the Arduino to read. The AC load can be cut off by using the driver circuit. MAX 232 is used as communication for the GSM and Wi-Fi module. The webpage is created with the aid of HTML. Nowadays, all the people cannot live without electricity. Due to selfishness of some people, they are keep using the electricity by not paying the money which is power theft.

(Preethi & Harish, 2016) introduces the smart energy meter to solve the problem of power theft. the communication between home section and base station section is using network. The power consumed and energy consumed will be calculated in this system. The energy used will be displayed on the LCD screen and it will send to consumer by monthly in the form of SMS. The power theft also can be checked by using this system. The software used for this system is keil IDE. there are two types of smart energy meter in this journal which are prepaid mode or post-paid mode. The result will be shown at two places which are LCD screen and SMS. The conventional way to collect the meter data is through one way communication which is collected by human being. This will cause a lot of trouble because the human will make some error when collecting the meter data.

To overcome this problem, (Joshi et al., 2016) introduces the IoT Based Smart Energy Meter. With this IoT based smart energy meter, the system can conduct two ways communication for billing and meter data collection. The IoT based smart energy meter can save a lot of time and save the usage of the electrical energy.

Other than that, this system can collect accurate data compared to the conventional way. In the block diagram of this system, there contains pulse which produces by the energy meter. Based on the researchers, the energy meter will rotate and the researchers connect the LDR sensor to sense the rotations of the meter and the Arduino will convert the rotations to the pulse. Once the Arduino receive the pulse, the algorithm will compute the units and calculating bills. The data will be saved to the server. The user can access easily to the server and monitor the electrical consumption. If the consumption above the limit set by the user, the alert message will send to user's mobile. With this system, it will reduce the power consumption. This system can be used effectively in a lot of related sectors. The limitation of this system is the initial cost is higher compared to conventional way

III. PROPOSED SYSTEM

Here, This project presents an integration of both hardware and software. The software is used to monitor power usage and the consumption of household appliances and control systems through overcurrent relay and notification of any mismatches. The developed system consists of microcontroller, a GSM/WiFi module. a relay, a low current sensor breakout (ACS712), and a liquid crystal display (LCD). PIC is a microcontroller used to program customized coding for executing output at any instant time. It is also a very capable microcontroller that receives and sends information over the Internet with various modules and shield platforms.

The outputs are shown in 2 ways: LCD and IoT implementation based on the web server or mobile application (APPS). LCD is used to display the voltage, current, and power consumption where the web or mobile application is used to visualize the data and trigger alarm, when necessary, In the web and mobile application systems, the energy usage statistics of power consumption parameters are determined. It displays the detailed monitoring of electrical quantities such as voltage, current, power, and energy.

IJARSCT
International Journal of Advanced Research in Science, Communication and Technology
International Open-Access, Double-Blind, Peer-Reviewed, Refereed, Multidisciplinary Online Journal
ISSN: 2581-9429
Volume 6, Issue 2, May 2026
Impact Factor: 8.2

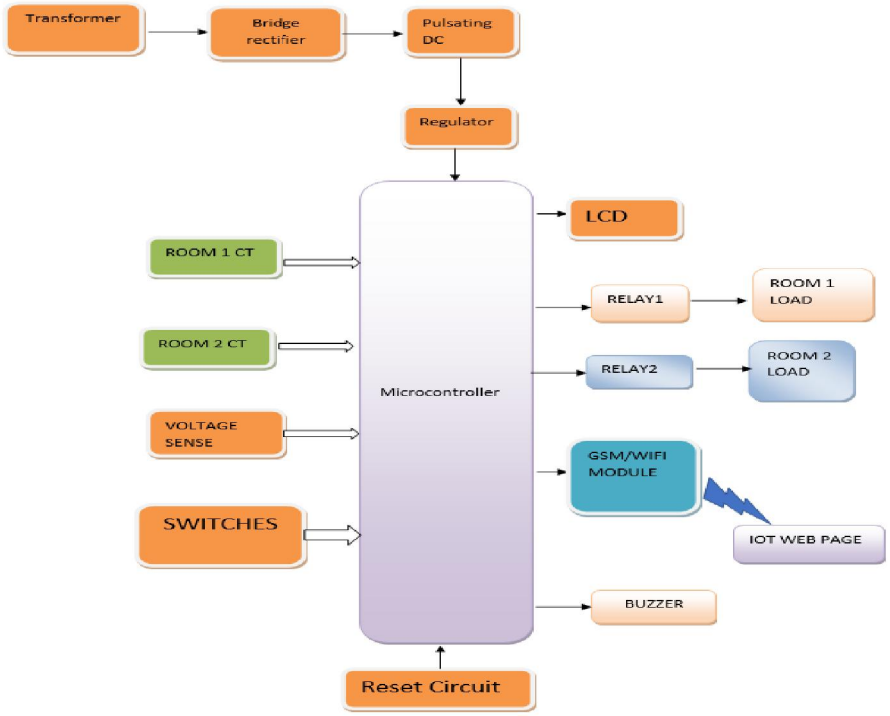

Fig. 1. Block Diagram

A. PIC 18f4520 Microcontroller

It is an 8-bit enhanced flash PIC microcontroller that comes with nanoWatt technology and is based on RISC architecture. Many electronic applications house this controller and cover wide areas ranging from home appliances, industrial automation, security system and end-user products. This microcontroller has made a renowned place in the market and becomes a major concern for university students for designing their projects, setting them free from the use of a plethora of components for a specific purpose, as this controller comes with inbuilt peripheral with the ability to perform multiple functions on a single chip.

• Data Memory up to 4k bytesn Data register map - with 12-bit address bus 000-FFF
• Divided into 256-byte banks
• There are total of F banks
• Half of bank 0 and half ofbank 15 form a virtual (oraccess) bank that is accessibleno matter which bank isselected – this selection isdone via 8-bit
• Program memory is 16-bits wide accessed through a separate program data bus and address bus inside the PIC18.
• Program memory stores the program and also static data in the system.
• On-chip External
• On-chip program memory is either PROM or EEPROM.
• The PROM version is called OTP (one-time programmable) (PIC18C) The EEPROM version is called Flash memory (PIC18F).
• Maximum size for program memory is 2M n Program memory addresses are 21-bit address starting at location 0x000000

IJARSCT
International Journal of Advanced Research in Science, Communication and Technology
International Open-Access, Double-Blind, Peer-Reviewed, Refereed, Multidisciplinary Online Journal
ISSN: 2581-9429
Volume 6, Issue 2, May 2026
Impact Factor: 8.2

Fig. 2. PIC18f4520 Microcontroller

B. Current sensor(CT)

A current sensor is a device that detects and converts current to an easily measurable output voltage, which is proportional to the current through the measured path. There are a wide variety of sensors, and each sensor is suitable for a specific current range and environmental condition. Among these sensors, a current sensing resistor is the most commonly used. It can be considered a current-to-voltage converter, where inserting a resistor into the current path, the current is converted to voltage in a linear way. The technology used by the current sensor is important because different sensors can have different characteristics for a variety of applications.

Current sensors are based on either open or closed loop Hall Effect technology. A closed-loop sensor has a coil that is actively driven to produce a magnetic field that opposes the field produced by the current being sensed. The hall sensor is used as a null-detecting device, and the output signal is proportional to the current being driven into the coil, which is proportional to the current being measured.

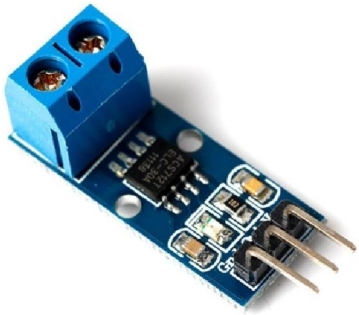

Fig. 3. Current Sensor

C. Relay Driver Circuit

A relay driver circuit is a circuit which can drive, or operate, a relay so that it can function appropriately in a circuit. The driven relay can then operate as a switch in the circuit which can open or close, according to the needs of the circuit and its operation. In this project, we will build a relay driver for both DC and AC relays. Since DC and AC voltages operate differently, to build relay drivers for them requires slightly different setup. We will also go over a generic relay driver which can operate from either AC or DC voltage and operate both AC and DC relays.

Now that we're using a transistor to drive the relay, we can use considerably less power to get the relay driven. Because a transistor is an amplifier, we just have to make sure that the base lead gets enough current to cause a larger current to flow from the emitter of the transistor to the collector. Once the base receives sufficient power, the transistor will conduct from emitter to collector and power the relay.

IJARSCT
International Journal of Advanced Research in Science, Communication and Technology
International Open-Access, Double-Blind, Peer-Reviewed, Refereed, Multidisciplinary Online Journal
ISSN: 2581-9429
Volume 6, Issue 2, May 2026
Impact Factor: 8.2

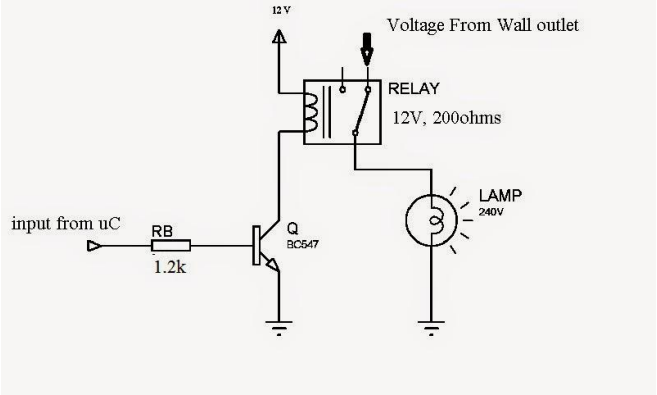

Fig. 4. Relay Driver Circuit

D. GSM Module (SIM800)

This GSM modem has a SIM800A chip and RS232 interface while enables easy connection with the computer or laptop using the USB to Serial connector or to the microcontroller using the RS232 to TTL converter. Once you connect the SIM800 modem using the USB to RS232 connector, you need to find the correct COM port from the Device Manger of the USB to Serial Adapter. Then you can open Putty or any other terminal software and open an connection to that GSM Module (SIM800)

COM port at 9600 baud rates, which is the default baud rate of this modem. Once a serial connection is open through the computer or your microcontroller you can start sending the AT commands. When you send AT commands for example: "AT\r" you should receive back a reply from the SIM800 modem saying "OK" or other response depending on the command send.

Fig. 5. GSM Module

E. LCD Display

LCD (Liquid Crystal Display) screen is an electronic display module and find a wide range of applications. A 16x2 LCD display is very basic module and is very commonly used in various devices and circuits. These modules are preferred over seven segments and other multi segment LEDs. The reasons being: LCDs are economical; easily programmable; have no limitation of displaying special & even custom characters (unlike in seven segments), animations and so on.

A 16x2 LCD means it can display 16 characters per line and there are 2 such lines. In this LCD each character is displayed in 5x7 pixel matrix. This LCD has two registers, namely, Command and Data. The command register stores the command instructions given to the LCD. A command is an instruction given to LCD to do a predefined task like

IJARSCT
International Journal of Advanced Research in Science, Communication and Technology
International Open-Access, Double-Blind, Peer-Reviewed, Refereed, Multidisciplinary Online Journal
ISSN: 2581-9429
Volume 6, Issue 2, May 2026
Impact Factor: 8.2

initializing it, clearing its screen, setting the cursor position, controlling display etc. The data register stores the data to be displayed on the LCD.

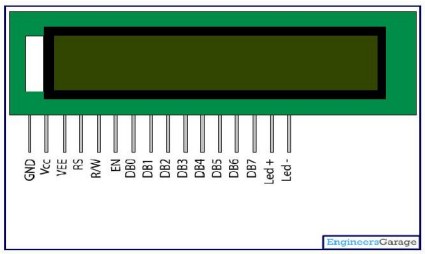

Fig. 6. LCD Display

F. Things speak IOT

ThingSpeak is IoT Cloud platform where you can send sensor data to the cloud. You can also analyze and visualize your data with MATLAB or other software, including making your own applications. The ThingSpeak service is operated by MathWorks. In order to sign up for ThingSpeak, you must create a new MathWorks Account or log in to your existing MathWorks Account. ThingSpeak is free for small non-commercial projects. ThingSpeak includes a Web Service (REST API) that lets you collect and store sensor data in the cloud and develop Internet of Things applications. It works with Arduino, Raspberry Pi and MATLAB (premade libraries and APIs exists) But it should work with all kind of Programming Languages, since it uses a REST API and HTTP.

IV. CONCLUSION

Hostel Rooms and Energy Management is a current trend with the development of IoT. A lot of work has been reported in regard to controlling the appliances of the home and also monitoring the electrical parameters towards hazards. Also, work reporting in controlling the appliance for energy consumption.

The energy saving card system is used to turn on the power by using the student ID card. The IoT is used to store the data and retrieve the data from IoT platform. The smart meter system is used to calculate the energy consumption used by students. The methodology includes how this works and some calculations which related to this project. Besides, the GUI for data retrieving has been built and proposed in this project.

ACKNOWLEDGMENT

It gives us great pleasure in presenting the paper on " IOT Based Smart Energy Management & Overload Detection System for Hostel Infrasture". We would like to take this opportunity to thank our guide, prof.Priti Gund, Professor, Department of Electronics Engineering, Adsul's Technical Campus, Ahilyanagar for giving us all the help and guidance we needed. We are grateful to her for hers kind support, and valuable suggestions were very helpful

REFERENCES

[1] Tarun Kumar Singhal, Saurabh, IraVashishtha, PurviChugh2017IOT Enabled Smart Hostel: A Futuristic PerpectiveInternational Journal for Research in Applied Science & Engineerin Technology (IJRASET), Volume 5, Issue 9, pp.1451-1466.

[2] Abhay Kumar, Neha Tiwari 2015Energy Efficient Smart Home Automation SystemInternational Journal of Scientific Engineering and Research (IJSER), Volume 3, Issue 1, pp.9-11.

[3] Gunjal M.S, Andhale Tejal B, Dhamdhere Divya R, Dusunge Sujata S, Korade Renuka D2017 Online Hostel Management International Journal of Advanced Engineering and Science Research (IJAES), Volume 5, Issue 1, pp.112-114.

[4] RajanDatt, Utsav Shah, Dharmin Shah2018Student Attendance Management System Using Fingerprint Scanner International Journal of Pure and Applied Mathematics, Volume 119, pp.2273-2278.

[5] Hnin Nu Thaung, Zaw Myo Tun, Hla Myo Tun2016 Automatic Energy Control and Monitoring System For Building International Journal of Scientific and Technology Research, Volume 5, Issue 06, pp.125-129.

[6] Sneha Sonar, Rajendra Patil2016Hostel In Out Management and Monitoring System Using RFID, Face and Thumb Recognition International Journal of Innovative Research in Science, Engineering and Technology, Volume 5, Issue 4, pp.4978-4984. Abdulla, R. (2014). A Conceptual Study of Long Range Active RFID System for Reliable Data Communication. International Conference on Frontiers of Communications, Networks and Applications (ICFCNA 2014 - Malaysia), 1–6. https://doi.org/10.1049/cp.2014.1428

[7] Abdul-Rahman, A. I., & Graves, C. A. (2016). Internet of Things Application Using Tethered MSP430 to Thingspeak Cloud. 2016 IEEE Symposium on Service-Oriented System Engineering (SOSE), 352–357. https://doi.org/10.1109/SOSE.2016.42

[8]Al-Gumaei, W., Selvaperumal, S. K., Abdulla, R., & Nataraj, C. (2018). Smart Tree Care System with Internet of Things. Research Journal of Applied Sciences, Engineering and Technology, 15(9), 328–336. https://doi.org/10.19026/rjaset.15.5923

[9]Barman, B. K., Yadav, S. N., Kumar, S., & Gope, S. (2018). IOT Based Smart Energy Meter for Efficient Energy Utilization in Smart Grid. 2018 2nd International Conference on Power, Energy and Environment: Towards Smart Technology (ICEPE), 1–https://doi.org/10.1109/EPETSG.2018.8658501

[10]Eldemerdash, T., Abdulla, R., Jayapal, V., Nataraj, C., & Abbas, M. K. (2020). IoT Based Smart Helmet for Mining Industry Application. International Journal of Advanced Science and Technology, 29(1), 373–387. http://sersc.org/journals/index.php/IJAST/article/view/3004

[11]Energy Commission. (2017). Electrical – Final Electricity Consumption. https://meih.st.gov.my/statistics?p_auth=qBdPA2iU&p_p_id=Eng_Statistic_WAR_STOASPublicPortlet&p_p_lifecycle=1&p_p_state= maximized&p_p_mode=view&_Eng_Statistic_WAR_STOASPublicPortlet_execution=e1s1&_Eng_Statistic_WAR_STOASPublicPortlet__eventId=ViewStatistic3&categoryId=4&flowId=7